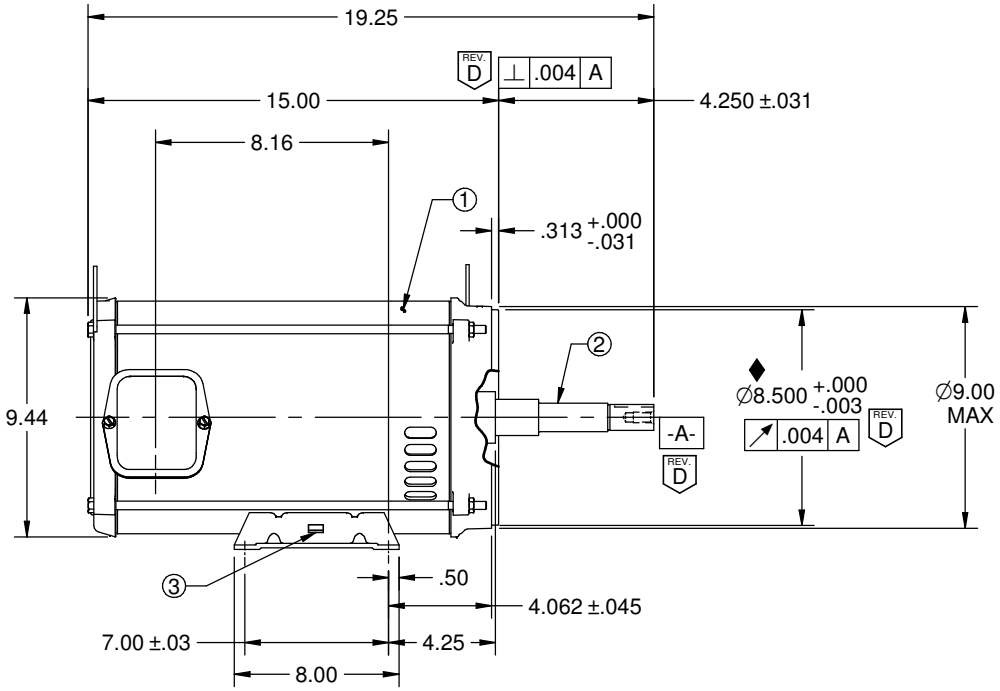

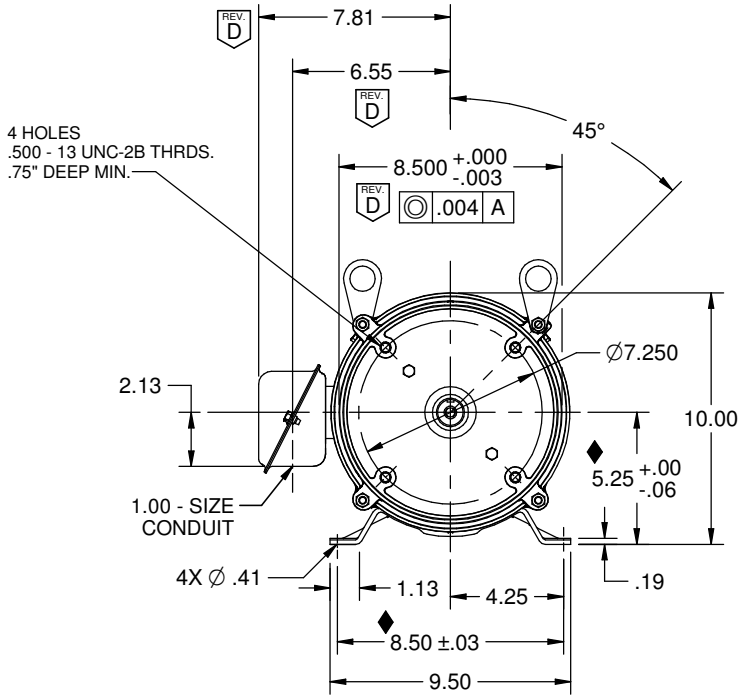

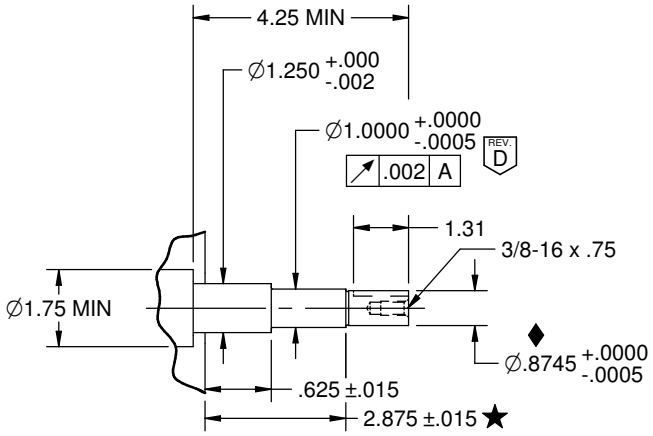

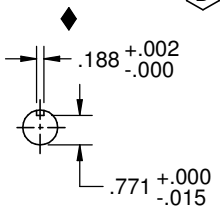

REV. D

USEM M/N	CATALOG	HP	PHASE	FREQ	VOLTS	SPEED	FRAME	TYPE	INSUL. CLASS
DB01	EEQK1500	15	3	60	208-230/460	3490-3515/3515	215JMZ	DE-4	F

REV. D

CODE	NNE	FLA	PF	SF	TYP. SF EFF.	SF AMPS	PF @ SF
G/J/J	90.2-91.0/91.0	40.0-38.0/18.8	86.7-82.0/82.0	1.15	89.4-90.5/90.5	46.0-43.0/21.3	86.8-83.6/83.6
	MIN. EFF.						
	88.5-89.5/89.5						

NOTES	
1	MOTOR PAINTED WITH BLACK-SEMI GLOSS-43-2747
2	303 STAINLESS STEEL SHAFT EXTENSION
3	BURNDY GKA4C GROUNDING LUG OR EQUIVALENT WITH LOCKWASHER BETWEEN LUG AND FOOT
4	GASKET BOTH SIDES OF SPACER
5	GASKET BETWEEN OUTLET BOX COVER AND OUTLET BOX BASE

NOTES (UNLESS OTHERWISE SPECIFIED):

1. ★ - CUSTOMER CRITICAL DIMENSION.
2. ♦ - MAJOR DIMENSION.

ITEMS AND MATERIALS SPECIFIED HEREIN MUST COMPLY WITH THE EUROPEAN REDUCTION OF HAZARDOUS SUBSTANCES (RoHS 2) DIRECTIVE 2011/65/EU, REGULATIONS (EC) NO. 1907/2006 ("REACH") AS OF 1 JUNE 2007 AND ALL SUBSEQUENT UPDATES. PLEASE REFER TO THE OFFICIAL EU DOCUMENTS FOR COMPLETE DEFINITION, RESTRICTIONS, AND LIMITS FOR EACH SUBSTANCE.

NIDEC CONFIDENTIAL
NIDEC MOTOR CORPORATION 23-MAY-18

REVISION DESCRIPTION FOR: D3420-00
ADDED GTOL, MODIFIED DIM 6.55 WAS 6.38, 7.81 WAS 7.63 AND TABLE VALUES.

MATERIAL: - - - -

SCALE: NONE
UNITS: INCHES
TOLERANCES ON DIMENSIONS (UNLESS OTHERWISE SPECIFIED)
INCHES | mm
ANGLES X°= ±1°

TITLE: DRAWING, DIMENSION

NIDEC MOTOR CORPORATION

ISSUED BY: I. GONZALEZ
APPROVED BY: P. ORTEGA
REVISION DATE: 22-JUN-18
CODE
DWG NO.: 0645555
REV: D
SHEET NUMBER: 1 OF 1
DWG SIZE: B

NMCB (OCT-2013)
SOLIDEDGE